Reduced Bore - Dimensions & Assembly

Two Piece Soft Seated Ball Valve

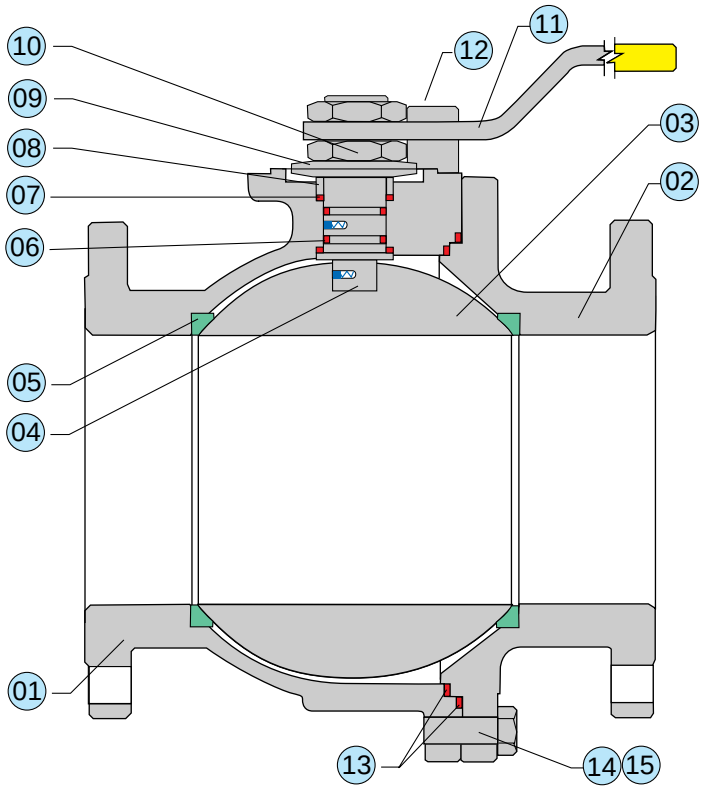

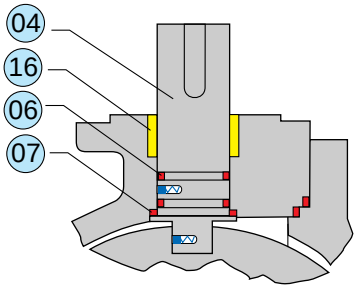

Stem Assembly Details
for 6" and 8"

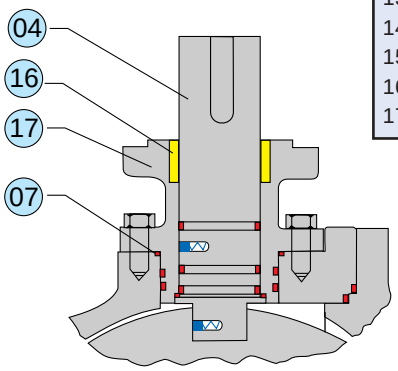

Stem Assembly Details
for 10" and 12"

Item	Part Name
01	Body
02	Body Adapter
03	Ball
04	Stem
05	Seats
06	'O' Ring
07	Stem Gasket
08	Spacer
09	Cup Spring
10	Stem Nuts
11	Handle
12	Stop Pin
13	Body Gasket
14	Stud/Bolt
15	Nut
16	Stem Bush
17	Stem Housing